Series and Parallel Circuits

To be able to calculate total current in series and parallel circuits
To be able to calculate total potential difference in series and parallel circuits
To be able to calculate total resistance in series and parallel circuits

Series Circuits

In a series circuit all the components are in one circuit or loop. If resistor 1 in the diagram was removed this would break the whole circuit.

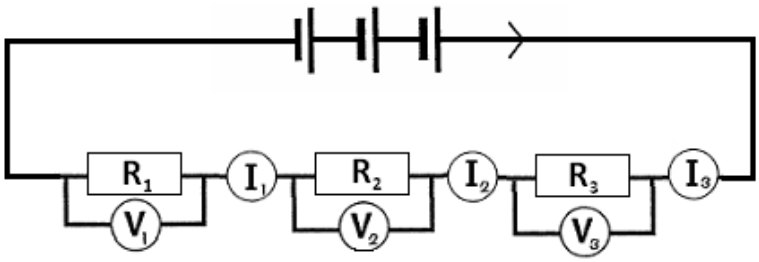

The total current of the circuit is the same at each point in the circuit. $I_{TOTAL} = I_1 = I_2 = I_3$

The total voltage of the circuit is equal to the sum of the p.d.s across each resistor. $V_{TOTAL} = V_1 + V_2 + V_3$

The total resistance of the circuit is equal to the sum of the resistance of each resistor. $R_{TOTAL} = R_1 + R_2 + R_3$

Parallel Circuits

Components in parallel have their own separate circuit or loop. If resistor 1 in the diagram was removed this would only break that circuit, a current would still flow through resistors 2 and 3.

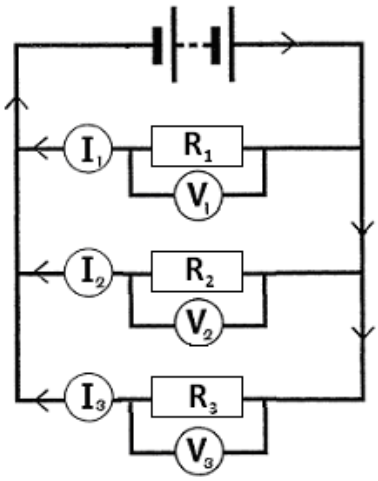

The total current is equal to the sum of the currents through each resistor.

$$I_{TOTAL} = I_1 + I_2 + I_3$$

The total potential difference is equal to the p.d.s across each resistor.

$$V_{TOTAL} = V_1 = V_2 = V_3$$

The total resistance can be calculated using the equation:

$$\frac{1}{R_{TOTAL}} = \frac{1}{R_1} + \frac{1}{R_2} + \frac{1}{R_3}$$

Water Slide Analogy

Imagine instead of getting a potential difference we get a height difference by reaching the top of a slide. This series circuit has three connected slides and the parallel circuit below has three separate slides that reach the bottom.

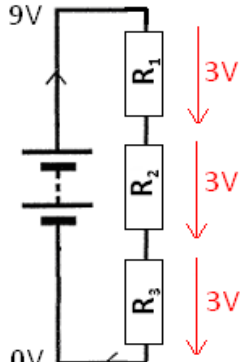

Voltages/P.D.s

In series we can see that the total height loss is equal to how much you fall on slide 1, slide 2 and slide 3 added together. This means that the total p.d. lost must be the p.d. given by the battery. If the resistors have equal values this drop in potential difference will be equal.

In parallel we see each slide will drop by the same height meaning the potential difference is equal to the total potential difference of the battery.

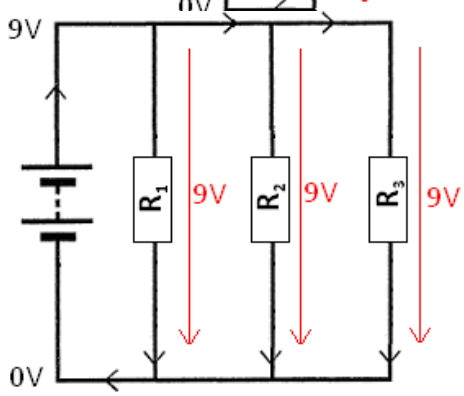

Currents

If we imagine 100 people on the water slide, in series we can see that 100 people get to the top. All 100 must go down slide 1 then slide 2 and final

slide 3, there is no other option. So the current in a series circuit is the same everywhere.
In parallel we see there is a choice in the slide we take. 100 people get to the top of the slide but some may go down slide 1, some down slide 2 and some down slide 3. The total number of people is equal to the number of people going down each slide added together, and the total current is equal to the currents in each circuit/loop.