Electricity

2015 EdExcel A-Level Physics

Topic 3

Resistance

Physics Tutor Online

Resistance

Resistance is the opposition that a substance offers to the flow of electric current. It is measured in Ohms, a unit named after me.

The resistance of a component can be calculated using this equation:

$$\text{Resistance (in } \Omega) = \frac{\text{Voltage (in V)}}{\text{Current (in A)}}$$

Resistance

$$\text{Resistance (Ohms, } \Omega) = \frac{\text{Potential Difference (volts, V)}}{\text{Current (amps, A)}}$$

Calculate resistance of the following:

1) If voltage is 5V and current is 1.5A.
2) If voltage is 24V and current is 2A.
3) If voltage is 220V and current is 30A.
4) If current is 0.8A and voltage is 12V.

Resistors in Series

In a series circuit…

- current stays the same through the circuit
- voltage splits up

$V_T = IR_T$

$V_T = V_1 + V_2$

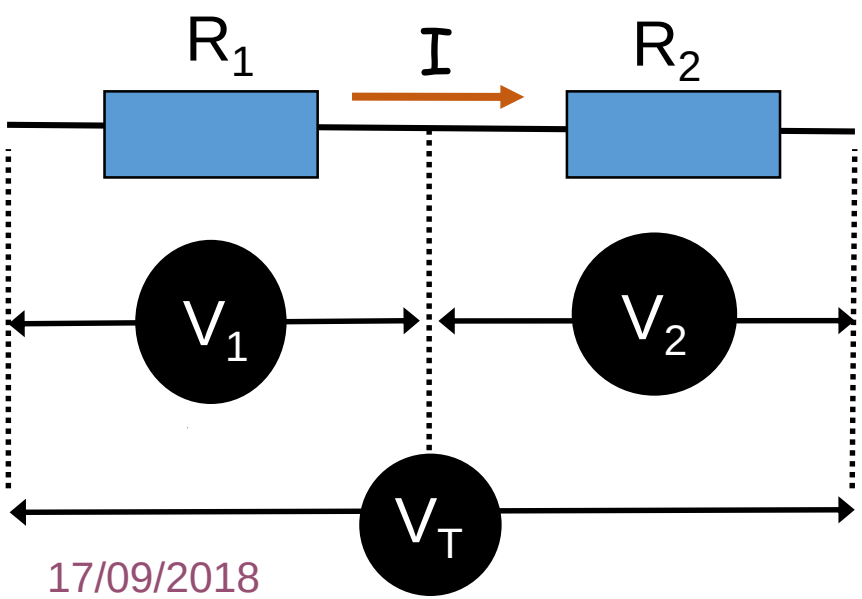

But $V_1 = IR_1$ and $V_2 = IR_2$

$IR_T = IR_1 + IR_2$

$R_T = R_1 + R_2$

Resistors in Parallel

In a parallel circuit….

- current splits → $I_T = I_1 + I_2$
- Voltage is the same across branches → $I_T = \frac{V}{R_T}$

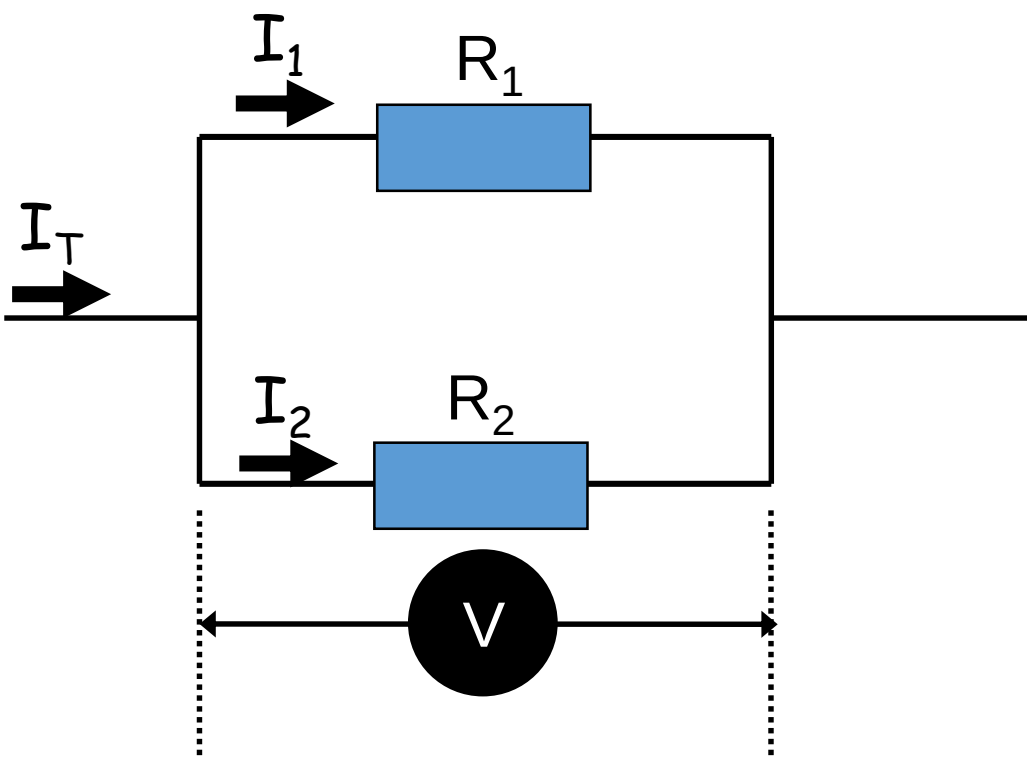

$$\frac{V}{R_T} = \frac{V}{R_1} + \frac{V}{R_2}$$

$$\frac{1}{R_T} = \frac{1}{R_1} + \frac{1}{R_2}$$

Example

Calculate the equivalent resistance of the circuit:

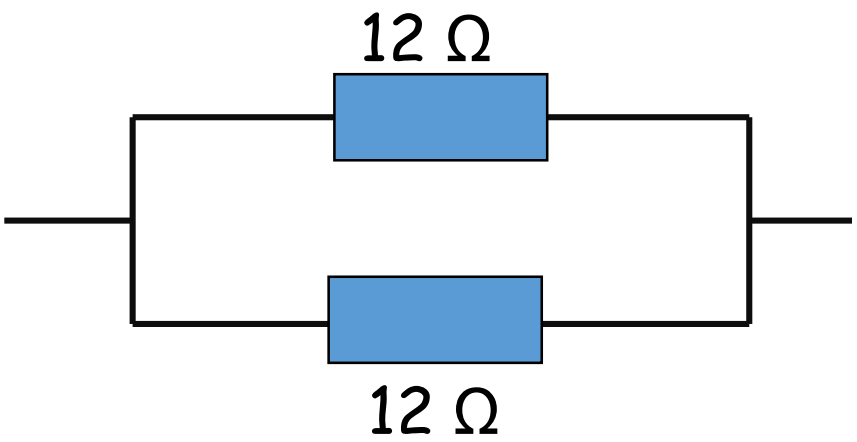

Example

Calculate the equivalent resistance of the circuit:

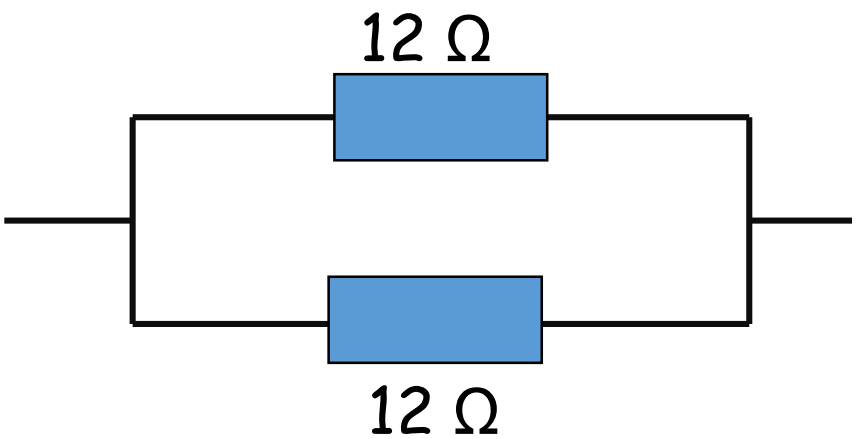

Solution:

As we know

$$\frac{1}{R_T} = \frac{1}{R_1} + \frac{1}{R_2}$$

$$\frac{1}{R_T} = \frac{1}{12} + \frac{1}{12} = \frac{1}{6}$$

$$R_T = 6\Omega$$

Practise questions

Calculate the combined resistance:

1)

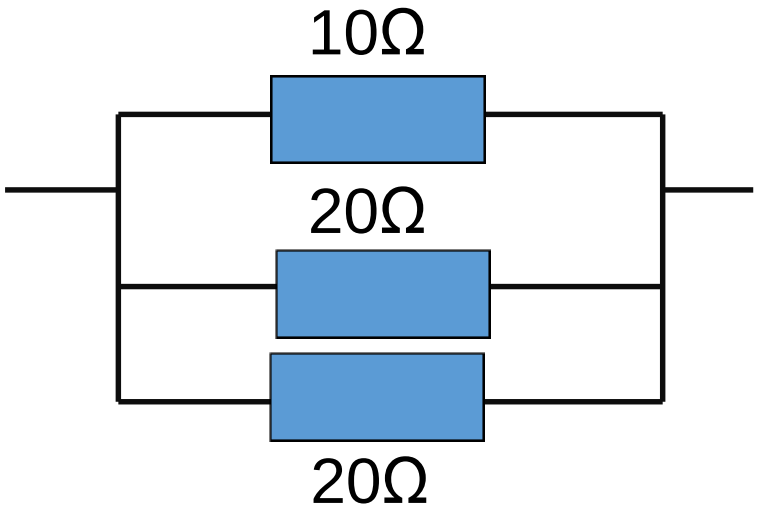

2)

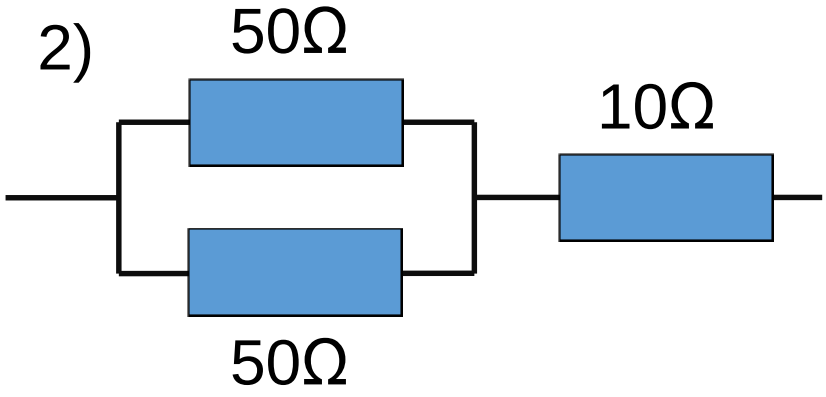

3)

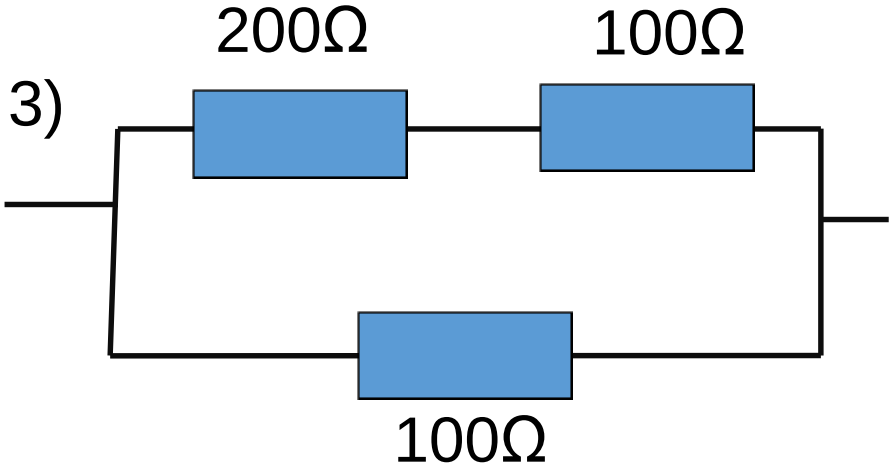

Current-voltage graphs

For a resistor:

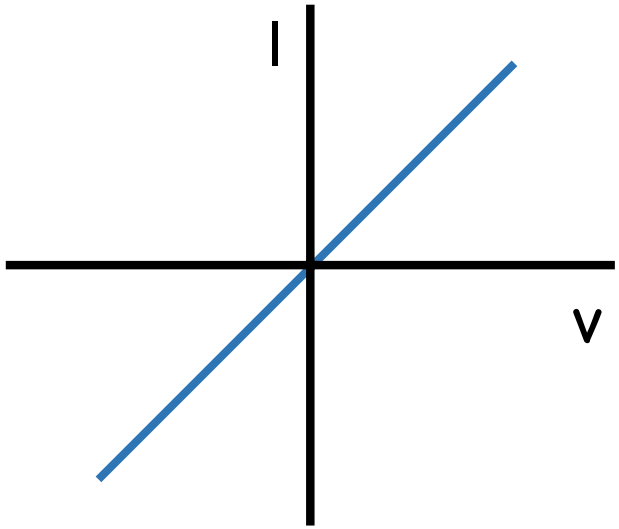

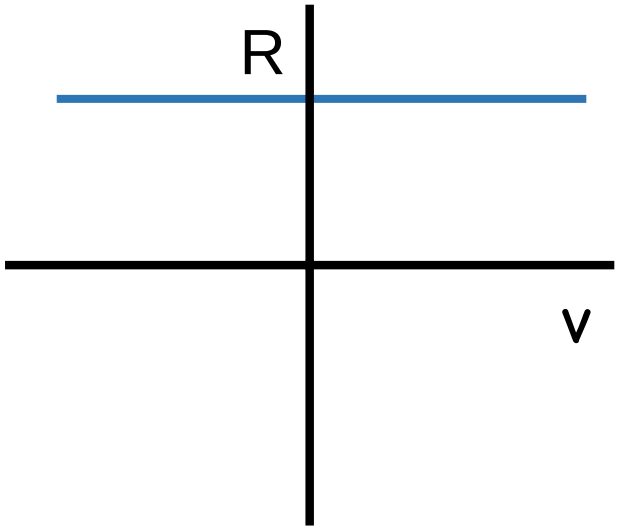

Current increases in proportion to voltage – an "Ohmic conductor"

Resistance stays constant provided temperature is constant

Current-voltage graphs

For a bulb:

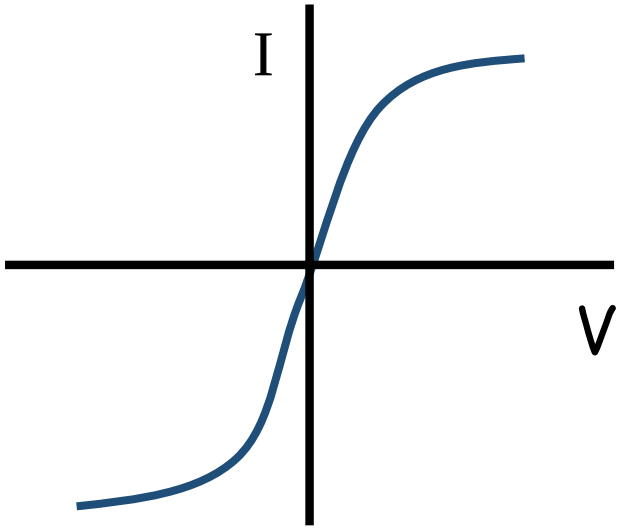

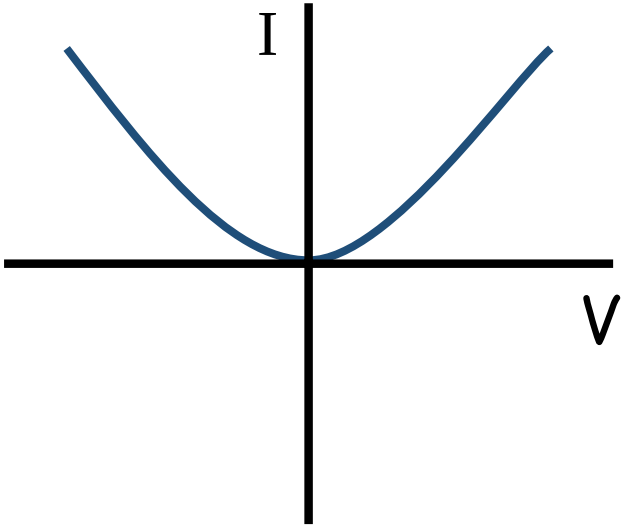

As voltage increases the bulb gets hotter and resistance increases - a ‘non-Ohmic’ conductor

Resistance increases as the bulb gets hotter

Current-voltage graphs

For a diode:

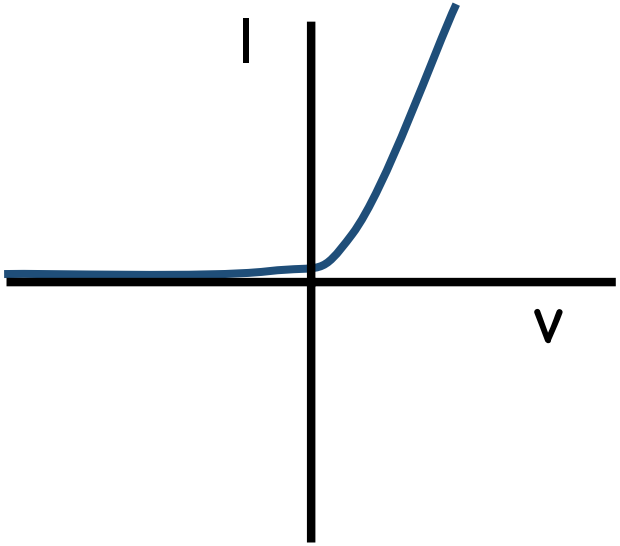

A diode only lets current go in the "forward" direction

For a thermistor:

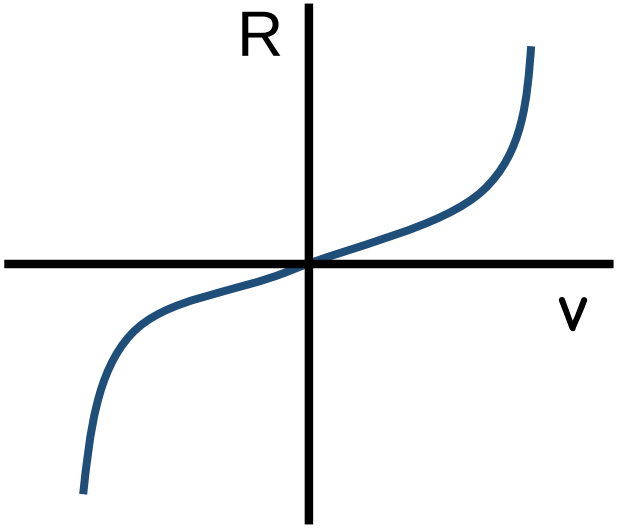

Resistance decreases as the ("negative-temperature-coefficient") thermistor gets hotter

Ammeters and Voltmeters

- Electric current is measured in Amperes(A), using an ammeter connected in series in the circuit.
- The resistance of an ammeter is assumed to be VERY SMALL – this ammeter will only have a very small voltage across it. This is why you can connect it in SERIES.

- Voltage is measured in volts(V) Using an voltmeter connected parallel in the circuit.
- The resistance of a voltmeter is assumed to be VERY LARGE, so only a small current will go through it. This is why you connect it in PARALLEL.

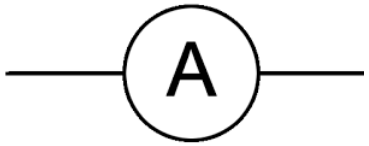

Ohm's Law

Voltage drop across a resistor is proportional to the current flowing through the resistor.

Mathematically

Voltage =current x resistance

- V=I x R
- I=V/R
- R=V/I

This is usually only the case if temperature stays constant.

Example

Solution:

Resistance across the bulb is

$$R = \frac{V}{I} = \frac{20}{4}$$

$$R = 5\Omega$$

Total resistance of these bulbs (Assuming all bulbs are same) will be

$$R_T = R_1 + R_2 + R_3$$

$$R_T = 5 + 5 + 5$$

$$R_T = 15\Omega$$

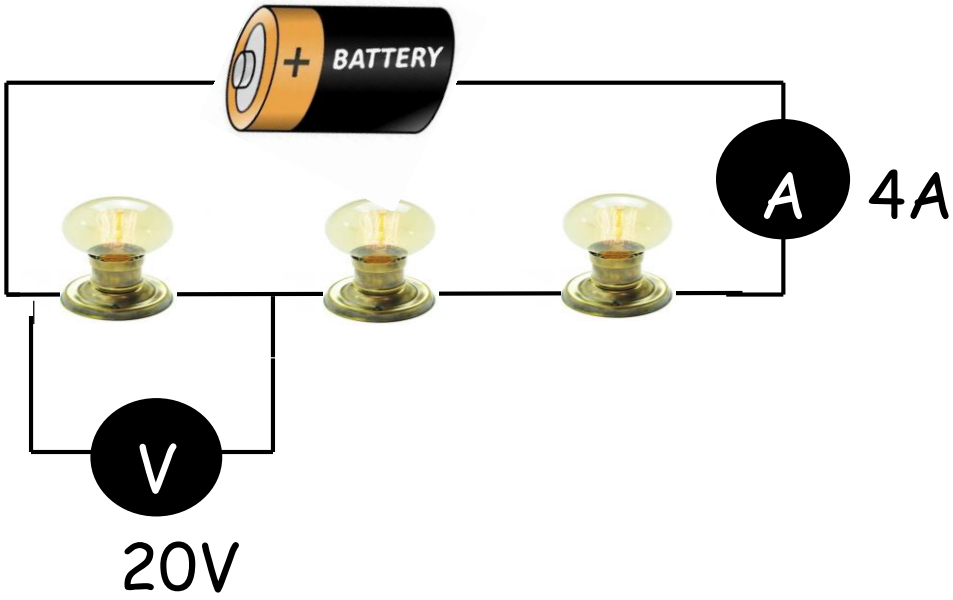

1)What is the resistance across this bulb?

2)Assuming all the bulbs are the same what is the total resistance in this circuit?

Practice question

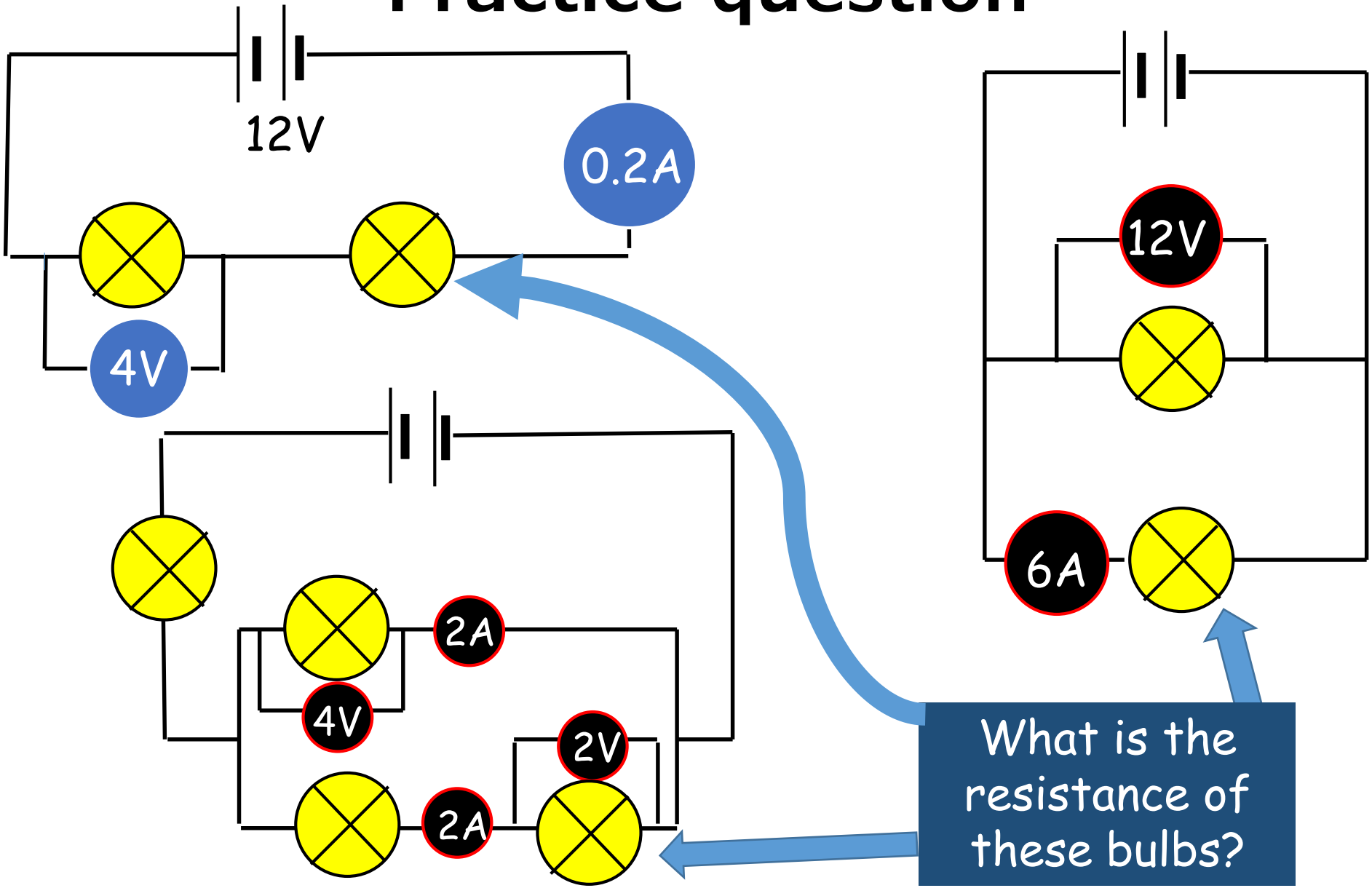

Practice question

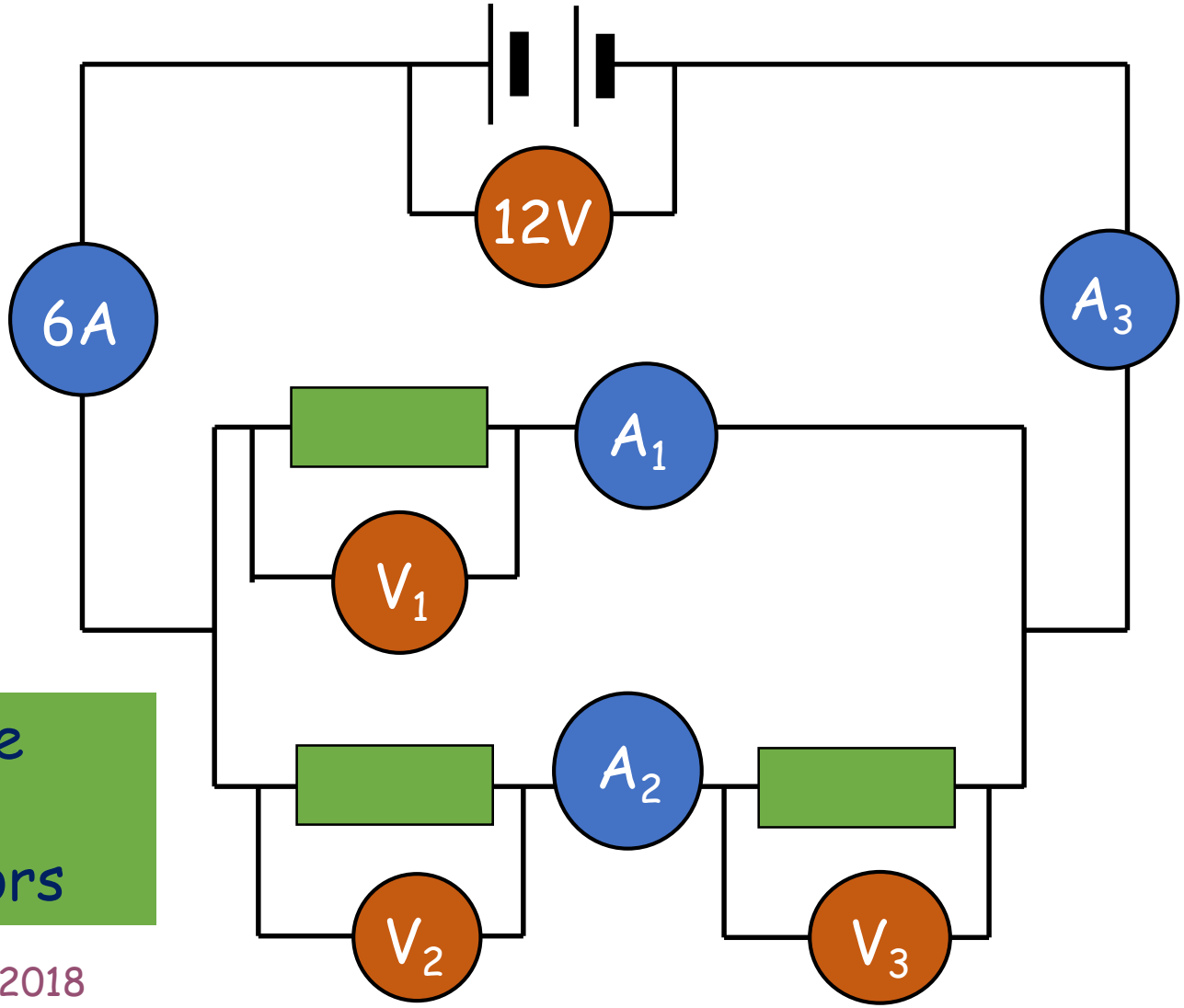

Assume similar resistors

Power through a resistor

Recall these equations:

1) $V = IR$ 2) $P = IV$

Putting these two equations together gives us:

$$\text{Power} = I \times IR = I^2R$$

$$\text{Or } P = (V/R)V = V^2/R$$

1) A 1kΩ resistor has voltage 1.5V across its terminals. Calculate the power dissipated by the resistor.

2) If a starter motor has 100A current flowing through it and its resistance is 2.4 MΩ. Calculate the power dissipated by the motor.

3) If an electric kettle has 1.5KW power dissipation and its resistance is 15Ω, calculate the current through it.